The Safety Company

User Instructions

Altair 4X® Multigas Detector

Order No.: 10105903/06

Print Spec: 10000005389 (EO)

CR: 800000065362

US

MSA**safety**.com

WARNING!

These instructions must be provided to users before use of the product and retained for ready reference by the user. Read this manual carefully before using or maintaining the device. The device will perform as designed only if it is used and maintained in accordance with the manufacturer's instructions. Otherwise, it could fail to perform as designed, and persons who rely on this device could sustain serious injury or death.

The warranties made by MSA with respect to the product are voided if the product is not installed and used in accordance with the instructions in this manual. Please protect yourself and your employees by following the instructions.

Please read and observe the WARNINGS and CAUTIONS inside. For additional information relative to use or repair, call 1-800-MSA-2222 during regular working hours.

For countries of Russian Federation, Republic of Kazakhstan and Republic of Belarus, the gas detector will be delivered with a passport document that includes valid approval information. On the CD with manual instruction attached to the gas detector the user will find the documents "Type Description" and "Test Method" - appendixes to Pattern Approval Certificate of Measuring instrument, valid in the countries of use.

MSA is a registered trademark of MSA Technology, LLC in the US, Europe and other Countries. For all other trademarks visit https://us.msasafety.com/Trademarks.

The Safety Company

1000 Cranberry Woods Drive
Cranberry Township, PA 16066
USA
Phone 1-800-MSA-2222

For your local MSA contacts, please go to our website www.MSAsafety.com

© MSA 2024. All rights reserved

Contents

1 Safety Regulations **4**
1.1 Correct Use 4
1.2 Safety and Precautionary Measures 4
1.3 Warranty 6

2 Description **7**
2.1 Overview 7
2.2 Device Hardware Interfaces 7
2.3 On-Screen Indicators 9
2.4 Battery Care 10
2.5 Viewing Optional Displays 11
2.6 Sensor Missing Alarm 13
2.7 Sensor Life Warning 14
2.8 Sensor Life Indicator 14
2.9 Monitoring Toxic Gases 14
2.10 Monitoring Oxygen Concentration 14
2.11 Monitoring Combustible Gases 15

3 Operation **16**
3.1 Environmental Factors 16
3.2 Turning ON and Fresh Air Setup 16
3.3 Measurement Mode [Normal Operation] 19
3.4 Device Setup 20
3.5 Data Logging 23
3.6 Function Tests on the Device 23
3.7 Safe LED 24
3.8 Bump Test 24
3.9 Calibration 25

4 Maintenance **28**
4.1 Troubleshooting 28
4.2 Live Maintenance Procedure - Replacing and Adding a Sensor 28
4.3 Cleaning 29
4.4 Storage 30
4.5 Shipment 30

5 Technical Specifications/Certifications **30**
5.1 Technical Specifications 30
5.2 Factory-set Alarm Thresholds and Setpoints 31
5.3 Certification 31
5.4 Performance Specification 31
5.5 XCell Sensor Patents 34

6 Ordering Information **35**

7 Cross Reference Factors **36**

8 Appendix **37**
8.1 Start Up Sequence (Power on) 37
8.2 Fresh Air Setup (FAS) 38
8.3 Reset Screen Controls 39
8.4 Bump Test 41
8.5 Calibrations 42
8.6 Options Setup 43
8.7 Sensor Setup 44
8.8 Calibration Setup 45
8.9 Alarm Setup 46
8.10 Time and Date Setup 46

1 Safety Regulations

1.1 Correct Use

The ALTAIR 4X Multigas Detector is for use by trained and qualified personnel. It is designed to be used when performing a hazard assessment to:

- Assess potential worker exposure to combustible and toxic gases and vapors as well as low level of oxygen.
- Determine the appropriate gas and vapor monitoring needed for a workplace.

The ALTAIR 4X Multigas Detector can be equipped to detect:

- Combustible gases and certain combustible vapors
- Oxygen-deficient or oxygen-rich atmospheres
- Specific toxic gases for which a sensor is installed.

NOTE: While the instrument can detect up to 30% oxygen in ambient air, it is approved for use only up to 21% oxygen.

WARNING!

Read and follow all instructions carefully.

- Perform a bump test before each day's use and adjust if necessary.
- Perform a bump test more frequently if exposed to silicone, silicates, lead-containing compounds, hydrogen sulfide, or high contaminant levels.
- Use only to detect gases/vapors for which a sensor is installed.
- Do not use to detect combustible dusts or mists.
- Make sure adequate oxygen is present for accurate combustible readings (>10% O_2).
- Do not block sensors.
- Have a trained and qualified person interpret instrument readings.
- Do not recharge Li polymer battery in a combustible atmosphere.
- Do not alter or modify instrument.

Failure to follow these warnings can result in serious personal injury or death.

NOTE: This equipment has been tested and found to comply with the limits for a Class A digital device, pursuant to part 15 of the FCC Rules. These limits are designed to provide reasonable protection against harmful interference when the equipment is operated in a commercial environment. This equipment generates, uses, and can radiate radio frequency energy and, if not installed and used in accordance with the instruction manual, may cause harmful interference to radio communications. Operation of this equipment in a residential area is likely to cause harmful interference in which case the user will be required to correct the interference at his own expense.

WARNING!

1.2 Safety and Precautionary Measures

- Check function (0.1 Function Tests) each day before use. MSA recommends carrying out a routine inspection prior to each day's use.
- Perform a Bump Test before each day's use (3.8 Bump Test) to verify proper device operation. The device must pass the bump test. If it fails the test, perform a calibration (3.9 Calibration) before using the device.
- Perform a bump test more frequently if the device is subjected to physical shock or high levels of contaminants. Also, perform a bump test more frequently if the tested atmosphere contains the following materials, which may desensitize the combustible gas sensor and reduce its readings:
    - Organic silicones
    - Silicates
    - Lead-containing compounds

  - Hydrogen sulfide exposures over 200 ppm or exposures over 50 ppm for one minute
- The minimum concentration of a combustible gas in air that can ignite is defined as the Lower Explosive Limit (LEL). A combustible gas reading of **XXX** indicates the atmosphere is above 100% LEL or 5.00%vol CH_4,and an explosion hazard exists. Move away from hazardous area immediately.
- Allow sufficient time for device to display accurate reading. Response times vary based on the type of sensor being utilized (5.4 Performance Specification).

WARNING!

Carefully review the following safety limitations and precautions before placing this device in service. Incorrect use can cause death or serious personal injury.

- Do not use the ALTAIR 4X Multigas Detector to test for combustible or toxic gases in the following atmospheres as this may result in erroneous readings:
  - Oxygen-deficient or oxygen-rich atmospheres
  - Reducing atmospheres
  - Furnace stacks
  - Inert environments
  - Atmospheres containing combustible airborne mists/dusts.
- Do not use the ALTAIR 4X Multigas Detector to test for combustible gases in atmospheres containing vapors from liquids with a high flash point (above 38°C/100°F) as this may result in erroneously low readings.
- Recheck calibration if device is subjected to physical shock, or is completely submerged underwater.
- Do not block sensor openings as this may cause inaccurate readings. Do not press on the face of the sensors, as this may damage them and cause erroneous readings. Do not use compressed air to clean the sensor holes, as the pressure may damage the sensors.
- All device readings and information must be interpreted by someone trained and qualified in interpreting device readings in relation to the specific environment, industrial practice and exposure limitations.

Failure to follow these warnings can result in serious personal injury or death.

Observe proper battery maintenance

WARNING!

Risk of explosion: Do not recharge device in hazardous area.

Failure to follow this warning can result in serious personal injury or death.

Use only battery chargers made available by MSA for use with this instrument; other chargers may damage the battery pack and the unit. Dispose of in accordance with local health and safety regulations.Use of the GALAXY Automated Test System is an alternate approved method for charging ALTAIR 4X instruments.

Environmental Conditions

A number of environmental factors may affect the sensor readings, including changes in pressure, humidity and temperature. Pressure and humidity changes also affect the amount of oxygen actually present in the atmosphere.

Procedures for Handling Electrostatically Sensitive Electronics

The device contains electrostatically sensitive components. Do not open or repair the device without using appropriate electrostatic discharge (ESD) protection. The warranty does not cover damage caused by electrostatic discharges.

Product Regulations

Follow all relevant national regulations applicable in the country of use.

Warranty Regulations

The warranties made by Mine Safety Appliances Company with respect to the product are voided if the product is not used and maintained in accordance with the instructions in this manual. Please protect yourself and others by following them. We encourage our customers to write or call regarding this equipment prior to use or for any additional information relative to use or service.

1.3 Warranty

ITEM	WARRANTY PERIOD
XCell CO/NO_2 Sensor	Three years
XCell H_2S-LC/SO_2	Three years
XCell H_2S/CO H_2-RES	Three years
XCell CO/H_2S-LC	Three years
XCell Ex-M	Three years
XCell EX-H Sensor	One year
Chassis and electronics	Three years
All sensors unless otherwise specified	Three years

This warranty does not cover filters, fuses, etc. As the battery pack ages, there will be a reduction in usable device run time. Specific battery run-time over temperature is not warranted. Certain other accessories not specifically listed here may have different warranty periods. This warranty is valid only if the product is maintained and used in accordance with Seller's instructions and/or recommendations.

The Seller shall be released from all obligations under this warranty in the event repairs or modifications are made by persons other than its own or authorized service personnel or if the warranty claim results from physical abuse or misuse of the product. No agent, employee or representative of the Seller has any authority to bind the Seller to any affirmation, representation or warranty concerning this product. Seller makes no warranty concerning components or accessories not manufactured by the Seller, but will pass on to the Purchaser all warranties of manufacturers of such components.

THIS WARRANTY IS IN LIEU OF ALL OTHER WARRANTIES, EXPRESSED, IMPLIED OR STATUTORY, AND IS STRICTLY LIMITED TO THE TERMS HEREOF. SELLER SPECIFICALLY DISCLAIMS ANY WARRANTY OF MERCHANTABILITY OR OF FITNESS FOR A PARTICULAR PURPOSE.

Exclusive Remedy

It is expressly agreed that Purchaser's sole and exclusive remedy for breach of the above warranty, for any tortious conduct of Seller, or for any other cause of action, shall be the replacement at Seller's option, of any equipment or parts thereof, which after examination by Seller is proven to be defective.

Replacement equipment and/or parts will be provided at no cost to Purchaser, F.O.B. Seller's Plant. Failure of Seller to successfully replace any nonconforming equipment or parts shall not cause the remedy established hereby to fail of its essential purpose.

Exclusion of Consequential Damage

Purchaser specifically understands and agrees that under no circumstances will seller be liable to purchaser for economic, special, incidental or consequential damages or losses of any kind whatsoever, including but not limited to, loss of anticipated profits and any other loss caused by reason of non-operation of the goods. This exclusion is applicable to claims for breach of warranty, tortious conduct or any other cause of action against seller.

2 Description

2.1 Overview

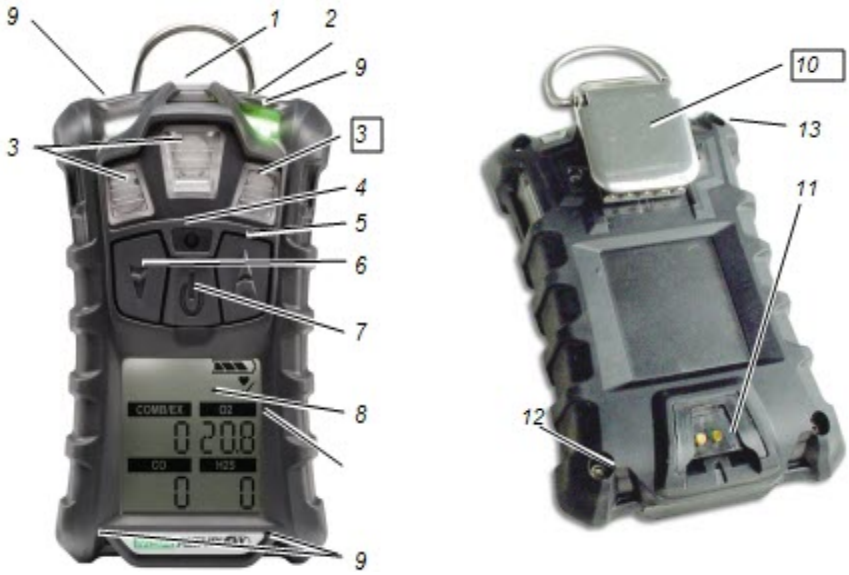

1. MSA link Communication
2. Safe LED [green] and Fault LED [yellow]
3. Sensor Inlets
4. Horn
5. ▲ Button
6. ▼ Button
7. ⏻ Button
8. Display
9. Alarm LEDs [4]
10. Belt Clip
11. Charging Connection
12. Screws [4]
13. Charge LED [red/green]

Figure 1 Device Overview

The device monitors gases in ambient air and in the workplace.

The device is available with a maximum of three sensors, which can display readings for four separate gases (one Two-Tox Sensor provides both CO and H_2S sensing capabilities in a single sensor).

While the device can detect up to 30% oxygen in ambient air, it is approved for use only up to 21% oxygen.

The alarm levels for the individual gases are factory-set and can be changed through the Setup Menu. These changes can also be made through MSA Link software. Ensure that the latest version of the MSA Link software has been downloaded from MSA's website www.msasafety.com.

NOTE: If gas is present during Fresh Air Setup, the device will fail and enters Measure mode.

2.2 Device Hardware Interfaces

Device operation is dialog driven from the display with the aid of the three function buttons (Figure 1).

Button Definitions

Button	Description
⏻	The ⏻ button is used to turn device ON or OFF and to confirm user action selections. When the ▲ button and the ⏻ button are pressed simultaneously at device start-up, the Options Setup Mode displays.
▼	The ▼↖↖ button is used to page down through data screens in measuring mode or as a page back and to decrease the values in Setup mode. Holding this button for 3 seconds while in Normal Measure mode activates the InstantAlert™ alarm.
▲	The ▲ button is used to reset peak, STEL TWA and acknowledge alarms (where possible) or access calibration in Measuring mode. It is also used as page up or to increase the values in Setup mode.

LED Definitions

LED	Description
GREEN	The Safe LED flashes once every 15 seconds to notify the user that the device is ON and operating under the conditions defined in 3.7 Safe LED. This option can be turned OFF through the MSA Link software.
RED	The Alarm LEDs are visual indications of an alarm condition or any type of error in the device.
YELLOW	The yellow fault LED is a visual indication of an device fault condition. This LED turns ON with the following conditions: • Device memory error • Sensor Missing • Sensor Error
RED/GREEN	The charge LED is a visual indication of charge status. • RED: device is charging • GREEN: charge is complete

Vibrating Alarm

The device is equipped with a vibrating alarm.

Backlight

The backlight automatically activates when any front panel button is pressed and remains ON for the duration of the user-selected timeout. This ON/OFF duration can be changed through MSA Link software.

Horn

The horn provides an audible alarm.

2.3 On-Screen Indicators

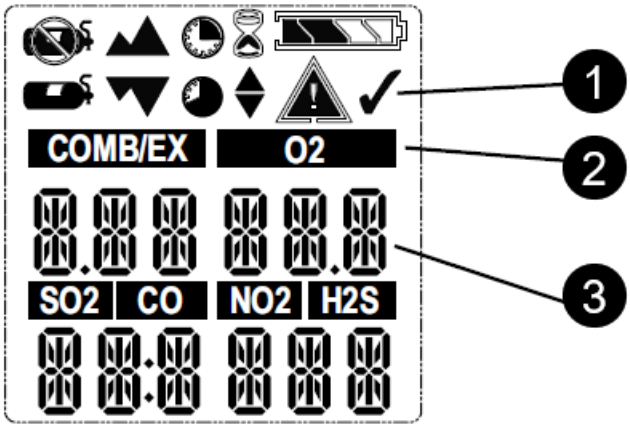

1. Graphic Symbols
2. Gas Type
3. Gas Concentration

Figure 2 Display

	Alarm Symbol – Indicates alarm state.
	Motion Alert™ – Indicates Motion Alert is active.
	Bump Check Symbol – Indicates successful bump or cal.
	Indicates required interaction.
	Battery Condition – Indicates the battery charge level.
COMB/EX O2 CO H2S	Sensor Labels.
	Cal Gas Cylinder – Indicates cal gas must be applied.
	No Gas Cylinder – Indicates cal gas should not be applied and device must be exposed to fresh air.
	Hourglass – Indicates user should wait.
	Minimum – Indicates a minimum value or low alarm.
	PEAK Symbol – Indicates a PEAK reading or high alarm.
	STEL Symbol – Indicates a STEL alarm.
	TWA Symbol – Indicates a TWA alarm.
	End of Sensor Life Warning/Indicator

2.4 Battery Care

Battery Life Indicator

The battery condition icon continuously displays in the upper right-hand corner of the display. As the battery is depleted, battery icon segments blank until only the battery icon outline remains.

Each indicator segment represents approximately 25% of the total battery capacity.

The nominal run-time of the device at room temperature is 22 hours. Actual run-time will vary depending on ambient temperature and alarm conditions. The runtime of the device at -4°F (- 20°C) will be approximately 12 hours.

The alarm levels for the individual gases are factory-set and can be changed through the Setup Menu.

Battery Warning

WARNING!

If battery warning alarm activates while using the instrument, leave the area immediately as the end of battery life is approaching.

Failure to follow this warning can result in serious personal injury or death.

A Low Battery Warning indicates that a nominal 30 minutes of operation remain before the battery's charge is depleted.

The duration of remaining device operation during a Low Battery -Warning depends on ambient temperatures.

When the device goes into Low Battery Warning, the:

- battery life indicator flashes
- alarm sounds
- alarm LEDs flash
- display flashes "`LOW BATT`" and
- device repeats this warning every 60 seconds and continues to operate until it is turned OFF or battery shutdown occurs.

Battery Shut Down

WARNING!

If the battery shutdown alarm activates, stop using the device as it no longer has enough power to indicate potential hazards, and persons relying on this device for their safety could sustain serious personal injury or death.

The device goes into battery shutdown mode 60 seconds before final shutdown (when the batteries can no longer operate the device):

- "`BATT ALARM`" and flash on the display
- Alarm sounds and lights flash; alarm cannot be silenced,
- No other pages can be viewed; after approximately one minute, the device -automatically turns OFF.

When battery shutdown condition occurs:

1. Leave the area immediately.
2. Recharge or replace the battery pack.

Battery Charging

WARNING!

- Risk of explosion: Do not recharge device in hazardous area.
- Use of any charger, other than the charger supplied with the device, may damage or improperly charge the batteries.
- The charger is capable of charging a completely depleted pack in less than four hours in normal, room-temperature environments.

Failure to follow this warning can result in serious personal injury or death.

NOTE: Allow very hot or cold devices to stabilize for one hour at room temperature before attempting to charge.

- Minimum and maximum ambient temperature to charge the instrument is 10°C (50°F) and 35°C (95°F), respectively.
- For best results, charge the device at room temperature (23°C/73°F).

To Charge the Device

- Firmly insert the charger connector into the charge port on the back of the device.
- The battery symbol scrolls through a progressively increasing number of segments and the charge LED is red until 90% of full charge has been obtained. Then the battery symbol remains fully illuminated and the charge LED turns green while the battery is trickle charged to its full capacity.
- If a problem is detected during charging, the battery symbol flashes and the charge LED turns orange. Disconnect the charger momentarily to reset the charge cycle.

Operating Beep

This operating beep activates every 30 seconds by momentarily beeping the horn and flashing the alarm LEDs under the following conditions:

- Operating beep is enabled
- Device is on normal Measure Gases page
- Device is not in battery warning
- Device is not in gas alarm
- Audible and visual options are enabled

2.5 Viewing Optional Displays

The Main Screen appears at device turn-ON.

Optional displays can be viewed by pressing the ▼↖↖ button to move to:

Bump Mode

1. To select the Bump mode, press the ⏻ button.
2. To move forward, press the ▼↖↖ button.
3. To move backward to the Main page, press the ▲↖↖ button.

Peak Readings (PEAK page)

The peak icon ▼▼ shows the highest levels of gas recorded by the device since turn-ON or since peak readings were reset.

To reset the peak readings:

1. Access the PEAK page.
2. Press the ▲↖↖ button.

Minimum Readings (MIN page)

This page shows the lowest level of oxygen recorded by the device since turn-ON or since the MIN reading was reset.

The minimum icon appears on the display.

To reset the MIN reading:

1. Access the MIN page.
2. Press the ▲ button.

Short Term Exposure Limits [STEL page]

WARNING!

If the STEL alarm activates, leave the contaminated area immediately; the ambient gas concentration has reached the preset STEL alarm level. Failure to follow this warning will cause over-exposure to toxic gases and persons relying on this product for their safety could sustain serious personal injury or death.

The STEL icon appears on the display to show the average exposure over a 15 minute period.

When the amount of gas detected by the device is greater than the STEL limit:

- Alarm sounds
- Alarm LEDs flash
- STEL icon flashes.

To reset the STEL:

1. Access the STEL page.
2. Press the ▲ button.

The STEL alarm is calculated over a 15 minute exposure.

STEL calculation examples:

Assume the device has been running for at least 15 minutes:

15 minute exposure of 35 ppm:

(15 minutes x 35 ppm)	= 35 ppm
15 minutes	

10 minute exposure of 35 ppm and 5 minutes exposure of 5 ppm:

(10 minutes x 35 ppm) + (5 minutes x 5 ppm)	= 25 ppm
15 minutes	

This page can be de-activated through MSA Link.

Time Weighted Average (TWA page)

WARNING!

If the TWA alarm activates, leave the contaminated area immediately; the ambient gas concentration has reached the preset TWA alarm level. Failure to follow this warning will cause over-exposure to toxic gases and persons relying on this product for their safety could sustain serious personal injury or death.

The TWA icon appears on the display to show the average exposure since the device was turned ON or since the TWA reading was reset. When the amount of gas detected is greater than the eight-hour TWA limit:

- Alarm sounds
- Alarm LEDs flash
- TWA icon flashes.

To reset the TWA:

1. Access the TWA page.
2. Press the ▲ button.

The TWA alarm is calculated over an eight-hour exposure.

TWA calculation examples:

1 hour exposure of 50 ppm:

(1 hour x 50 ppm) + (7 hours x 0 ppm)	= 6.25 ppm
8 hours	

4 hour exposure of 50 ppm and 4 hour exposure of 100 ppm:

(4 hours x 50 ppm) + (4 hours x 100 ppm)	= 75 ppm
8 hours	

12 hour exposure of 100 ppm:

(12 hours x 100 ppm)	= 150 ppm
8 hours	

Time Display

Current time appears on the display in a 12-hour format by default.

A 24-hour format can be selected using MSA Link.

Date Display

Current date appears on the display in the format: **MMM-DD-YYYY**.

Last cal page

Displays the device last successful calibration date in the format:
MMM-DD-YYYY

Cal due page

Displays the days until the device's next calibration is due [user selectable].

Motion Alert Page

To activate or deactivate the Motion Alert feature, press the ▲ button while the Motion Alert Activation page is displayed.

When the Motion Alert feature is active, the Motion Alert symbol △ flashes every 3 seconds. The device enters pre-alarm when no motion is detected for 20 seconds. This condition can be cleared by moving the device.

After 30 seconds of inactivity, the full Motion Alert alarm is triggered. This alarm can only be cleared by pressing the ▲ button.

2.6 Sensor Missing Alarm

The device enters the Sensor Missing alarm if the device detects that a sensor is not properly installed in the device or is not functional.

If a sensor is detected as missing, the following occurs:

- "SENSOR ERROR" displays.
- The flag above the sensor detected as missing flashes on the display.
- Alarm sounds and lights flash.
- Yellow Fault LED is on solid.
- If there is a sensor error at startup, the device shuts OFF in 60 seconds.

2.7 Sensor Life Warning

If a sensor is nearing its end of life, the instrument warns the user following a sensor calibration. While the sensor is still fully functional at this point, the warning gives the user time to plan for a replacement sensor and minimize downtime. The ♥ symbol is be continuously displayed. For more details, see 3.9 Calibration.

2.8 Sensor Life Indicator

If the device cannot calibrate one or more sensors, the device displays "SPAN ERR" followed by the Alarm symbol ⚠ and ♥ symbol to indicate end of sensor life. For more details, see 3.9 Calibration

2.9 Monitoring Toxic Gases

The device can monitor the concentration of the following toxic gases in ambient air:

- Carbon Monoxide (CO)
- Hydrogen Sulfide (H_2S)

The device displays the gas concentration in parts per million (PPM) or mg/m^3 on the Measuring page until another page is selected or the device is turned OFF.

⚠ WARNING!

If an alarm activates while using the device, leave the area -immediately.
Remaining in the area under such circumstances can cause serious personal injury or death.

The device has four gas alarms for each toxic gas:

- HIGH Alarm
- LOW Alarm
- STEL Alarm
- TWA Alarm

If the gas concentration reaches or exceeds the alarm set point, the device:

- backlight turns ON
- a vibrating alarm triggers
- device displays and flashes the Alarm icon ⚠(HIGH alarm)
- enters an alarm state.

2.10 Monitoring Oxygen Concentration

The device monitors the oxygen concentration in ambient air. The alarm set points can be set to activate on two different conditions:

- Enriched - oxygen concentration > 20.8 vol. % or
- Deficient - oxygen concentration < 19.5 vol.% .

While the device can detect up to 30% oxygen in ambient air, it is approved for use only up to 21% oxygen.

WARNING!

If an alarm activates while using the device, leave the area immediately. Remaining in the area under such circumstances can cause serious personal injury or death.

Failure to follow this warning can result in serious personal injury or death.

When the alarm set point is reached for either of the above conditions:

- an alarm sounds
- alarm LEDs flash
- a vibrating alarm triggers
- device displays and flashes the Alarm icon ⚠(Deficient alarm) along with the corresponding oxygen concentration.

The LOW alarm [oxygen deficient] is latching and will not automatically reset when the O_2 concentration rises above the LOW set point. To reset the alarm press the ▲ button. If the alarm condition still exists, the ▲ button only silences the alarm for five seconds.

False oxygen alarms can occur due to changes in barometric pressure [altitude] or extreme changes in ambient temperature.

It is recommended that an oxygen calibration be performed at the temperature and pressure of use. Be sure that the device is in known fresh air before performing a calibration.

2.11 Monitoring Combustible Gases

The device displays the combustible gas concentration in % LEL or % CH_4 on the Measuring page until another page is selected or the device is turned OFF.

WARNING!

If an alarm activates while using the device, leave the area -immediately.
Remaining in the area under such circumstances can cause serious personal injury or death.

The device has two alarm set points:

- HIGH Alarm
- LOW Alarm

If the gas concentration reaches or exceeds the alarm set point, the device:

- backlight turns on
- a vibrating alarm triggers
- device displays and flashes the Alarm icon ⚠ (HIGH alarm)
- enters an alarm state.

When gas reading reaches 100% LEL or 5.00% CH4, the device enters a Lock Alarm state, the combustible sensor shuts down and displays “xxx” in place of the actual reading. This state can only be reset by turning the device OFF and ON in a fresh air environment.

WARNING!

A combustible gas reading of "100" or "5.00" indicates the atmosphere is above 100% LEL or 5.00% vol CH4, respectively, and an explosion hazard exists. Move away from contaminated area immediately.

Failure to follow this warning can result in serious personal injury or death.

In such cases, the device LockAlarm feature activates.

3 Operation

Device operation is dialog driven from the display with the aid of the three Function buttons (see Figure 1).

3.1 Environmental Factors

A number of environmental factors may affect the gas sensor readings, including changes in pressure, humidity and temperature. Pressure and humidity changes affect the amount of oxygen actually present in the atmosphere.

Pressure Changes

If pressure changes rapidly (e.g., stepping through airlock), the oxygen sensor reading may temporarily shift and possibly cause the device to go into alarm. While the percentage of oxygen may remain at or near 20.8 Vol %, the total amount of oxygen present in the atmosphere available for respiration may become a hazard if the overall pressure is reduced by a significant degree.

Humidity Changes

If humidity changes by any significant degree (e.g., going from a dry, air conditioned environment to outdoor, moisture laden air), oxygen readings can be reduced by up to 0.5%, due to water vapor in the air displacing oxygen.

The oxygen sensor has a special filter to reduce the effects of humidity changes on oxygen readings. This effect will not be noticed immediately, but slowly impacts oxygen readings over several hours.

Temperature Changes

The sensors have built-in temperature compensation. However, if temperature shifts dramatically, the sensor reading may shift. Zero the device at the work site temperature for the least effect.

3.2 Turning ON and Fresh Air Setup

Device operation is dialog driven from the display with the aid of the three Function buttons (see Figure 1).

For more information, see the flow charts in 8.1 Start Up Sequence (Power on).

1. Turn the device ON with the ⏻ button.

The device performs a self test and then goes to Fresh Air Setup:

- all display segments are activated
- audible alarm sounds
- alarm LEDs light
- vibrating alarm is activated.

During the self test, the device checks for missing sensors. In the case of a missing sensor, the device displays the Sensor Missing screen and alarms until it is turned OFF. Otherwise, the turn-ON sequence continues.

The device displays:

- Alarm and display self test
- Manufacturer name
- Device name
- Software version
- Sensor discovery
- Combustible gas type
- Toxic gas units
- Alarm set points (▼, ▼)
- Calibration values
- Date and time display
- Last cal date (if activated)

- CAL due date (if activated)
- Fresh Air Setup option.

Refer to flowchart in 8.1 Start Up Sequence (Power on)

Screen Displays during Start Up

During the power-up sequence, all automatic page display timeouts are preset to a range from two to four seconds. Several sequences and screens occur during start up:

Device Self Test The device performs a self test.	
Device Name and Software version Software version and device name display.	
Combustible Gas Type Name of Combustible Gas Type displays, e.g. `BUTANE`. Combustible gas type can be changed manually through the SENSOR SETUP menu or the MSA Link software.	
Toxic Gas Units Name of Toxic Gas Units displays (ppm or mg/m^3). **:** Toxic units can only be modified through the MSA Link software.	

Alarm Set points

Alarm set points for all installed and activated sensors display.

LOW alarm set points display, followed by HIGH alarm set points.

NOTE: Alarm set points can be changed manually through the Setup menu or the MSA Link software.

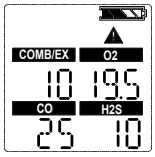

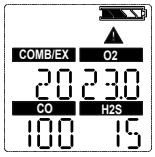

STEL and TWA Set points

The preset STEL and TWA values for installed and activated sensors display.

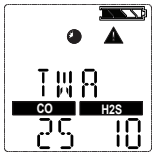

Calibration Values

The preset calibration values for installed and activated sensors display.

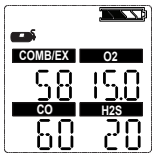

Time and Date

The date displays in a month, day and year format.

NOTE: In the event that the battery is fully discharged, the time and date reset. At startup, the user is prompted to enter the time and date.

If the time and date information is missing, they are reset to

[Jan-01-2008] with time stamp [00:00].

Last CAL Date and CAL Due

NOTE: These display options can be set by MSA Link software. If these options are not set, these screens are not displayed.

- By default Last Cal is activated.
- By default Cal Due is deactivated.

Fresh Air Setup (FAS)

The FAS screen is prompted (3.2.1 Fresh Air Setup (FAS)).

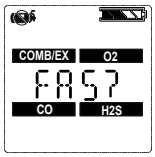

3.2.1 Fresh Air Setup (FAS)

The Fresh Air Setup (FAS) is for automatic ZERO calibration of the device.

The Fresh Air Setup has limits. The zero of any sensor that is outside of these limits will not be adjusted by the FAS command.

If a battery charging cycle is interrupted before it is completed (4 hours for a fully discharged battery), allow the device's internal temperature to stabilize for 30 minutes before performing a Fresh Air Setup.

⚠ WARNING!

Do not activate the Fresh Air Setup unless you are certain you are in fresh, uncontaminated air; otherwise, inaccurate readings can occur which can falsely indicate that a hazardous atmosphere is safe. If you have any doubts as to the quality of the surrounding air, do not use the Fresh Air Setup feature. Do not use the Fresh Air Setup as a substitute for daily calibration checks. The calibration check is required to verify span accuracy.

Failure to follow this warning can result in serious personal injury or death.

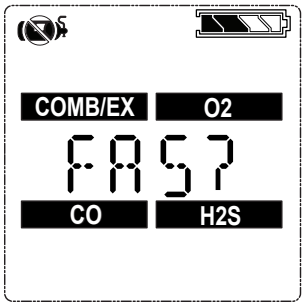

Figure 3 Fresh Air Setup

If this option is enabled, the device displays "`FAS?`", prompting the user to perform a Fresh Air Setup.

1. Press the ▲ button to bypass the Fresh Air Setup.
   - The Fresh Air Setup is skipped and the device goes to the Measuring page (Main page).
2. Press the q button within 10 seconds to perform the Fresh Air Setup.
   - The device starts the FAS.
   - The screen shows a No Gas Symbol, a blinking hourglass, and all enabled gas sensor readings.
   - At the end of the FAS Calibration, the device displays "`FAS OK`" or "`FAS ERR`" along with the flags of the sensors that were outside of the FAS limits. All sensors that are within the FAS limits will be zeroed.

3.3 Measurement Mode [Normal Operation]

In Normal Operation mode, the user can check the Minimum and Peak readings prior to clearing the STEL and TWA values or performing a Span and Zero Calibration.

The following options pages can be executed from the Normal Operation screen:

Bump Page This page allows the user to perform a bump check.		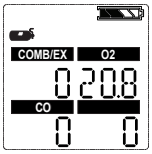
Peak Page This page shows the peak readings for all sensors.	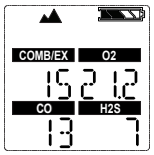	
Min Page This page shows the minimum reading for the oxygen sensor.		
STEL Page This page shows the calculated STEL readings of the device.		
TWA Page This page shows the calculated TWA readings of the device.	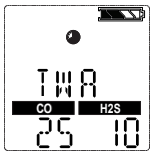	
Time / Date Page This page shows actual time and date settings of the device.		
Motion Alert (optional) This page allows the Motion Alert Feature to be -activated or deactivated.		

Using the three device buttons, the user can navigate through each sub-menu in a top/down sequence.

Refer to 2.5 Viewing Optional Displays and 8.1 Start Up Sequence (Power on) for detailed instructions on navigating through these screens.

3.4 Device Setup

This section describes the configuration options that are available through the Options Setup menus.The setup menus can be accessed only when the device is turned ON while pressing and holding the ▲ button (see 8.2 Fresh Air Setup (FAS) and 8.3 Reset Screen Controls).

This mode can only be activated at device turn-ON.

The operation is as follows:

1. Press and hold the ▲ button while turning the device ON.
   a. Use the ▲ and ▼↖↖ buttons to enter the setup password. The default password is "672".
2. Press ⏻ button to enter the setup menus.
   a. Incorrect password: device enters the Measure mode.
   b. Correct password: device continues/beeps three times.

NOTE: The password can be changed through the MSA Link software.

In the Setup mode:

- Press the ⏻ button to store chosen value or go to the next page.
- Press ▲ button to increase values by one or toggle a selection ON or OFF.
- Press and hold ▲ button to increase values by 10.
- Press ▼↖↖ button to decrease values by one or toggle a selection ON or OFF.
- Press and hold ▼↖↖ button to decrease values by 10.

The following options are available by pressing the ▼↖↖ and ▲ buttons:

- Sensor Setup (`SENSOR SETUP`) 20
- Calibration Setup (`CAL SETUP`) 20
- Alarm Setup (`ALARM SETUP`) 22
- Setup Time and Date (`TIME SET`) 23
- `EXIT`

Sensor Setup

Each sensor can be turned ON or OFF.

For more information, see the flow charts in 8.7 Sensor Setup.

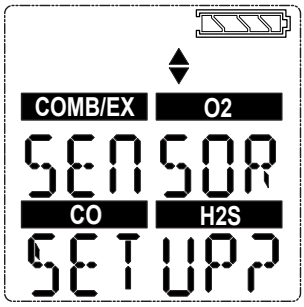

Figure 4 Sensor Setup

1. To bypass this setup, press the ▼↖↖ or ▲ button; otherwise, continue as follows.
2. Press the ⏻ button to enter the submenu.
3. Use the ▼↖↖ or ▲ button to change the option and confirm with the ⏻ button.
4. Repeat this procedure for all other sensors.
5. After setting the last sensor, continue to Calibration Setup.

Calibration Setup

The user can change and set the calibration values for each sensor.

It is also possible to select whether the Cal Due screen is displayed and set the number of days until the next calibration is due.

For more information, see the flow charts in 8.5 Calibrations .

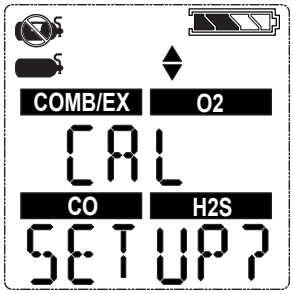

Figure 5 Calibration Setup

1. To bypass this setup, press the ▼↖↖ or ▲ button; otherwise, continue as follows.
2. Press the ⏻ button to enter the submenu.

   The calibration gas concentration of the first sensor is shown.
3. Press the ▼↖↖ or ▲ button to change the value.
4. Press the ⏻ button to store the value.

   Setup screen for the next sensor is displayed.
5. Repeat the procedure for all other sensors.

   After setting the last sensor, the user is prompted to set CALDUE.
6. Press the ▼↖↖ or ▲ button to enable or disable CALDUE.
7. Confirm with the ⏻ button.
8. If CALDUE is set ON, press the ▼↖↖ or ▲ button to select the number of days
9. Confirm with the ⏻ button.
10. After confirmation, continue to Alarm setup.

Alarm Setup

The user can switch all alarms ON or OFF and change the alarm set points for each sensor. For more information, see the flow charts in 8.9 Alarm Setup .

See 5.2 Factory-set Alarm Thresholds and Setpoints for alarm adjustment limits. The value of the High Alarm can only be set to a value that is higher than the Low Alarm set point.

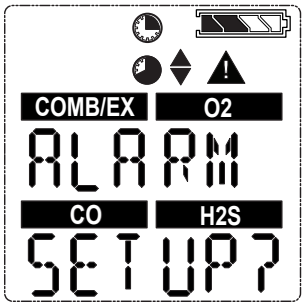

Figure 6 Alarm Setup

1. To bypass this setup, press the ▼ or ▲ button; otherwise, continue as follows.
2. Press the ⏻ button to enter the submenu.
3. Set alarms on or off by pressing the ▼ or ▲ button.
4. Press the ⏻ button to confirm the selection.

   LOW ALARM settings for the first sensor display.
5. Press the ▼ or ▲ button to change the value.
6. Press the ⏻ button to store the value.

   HIGH ALARM settings for the first sensor display.
7. Press the ▼ or ▲ button to change the value.
8. Press the ⏻ button to store the value.

   STEL ALARM settings (for toxic sensors only) display.
9. Press the ▼ or ▲ button to change the value.
10. Press the ⏻ button to store the value.

    TWA ALARM settings (for toxic sensor only) for display.

11. Press the ▼ or ▲ button to change the value.
12. Press the ⏻ button to store the value.
13. Repeat the procedure for all other sensors.
14. After setting the last sensor, continue to Time and Date setup.

60% L.E.L. or 3.0% volume of methane is the maximum High Alarm set point that can be programmed by the user.

The alarms can be silenced momentarily by pressing the ▲ button. However, if the gas concentration causing the alarm is still present, the device will go back into alarm.

Setup Time and Date

This submenu is for setting date and time.

For more information, see the flow charts in 8.1 Start Up Sequence (Power on) .

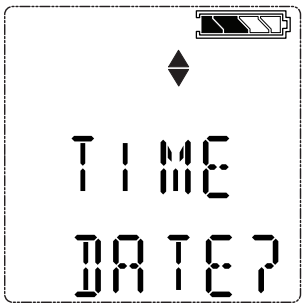

Figure 7 Date and Time Setup

1. To bypass this setup, press the ▼↖↖ or ▲ button; otherwise, continue as follows.
2. Press the q button to enter the submenu.
3. Set month by pressing the ▼↖↖ or ▲ button.
4. Press the q button to confirm month.
5. Repeat this procedure for day, year, hours and minutes.

   By default, time displays in a12 hour format.

   The `EXIT` *screen displays next.*
6. Confirming this screen with the q button exits the device setup.

   If the sensors have not warmed up yet, the countdown displays.

   The device then goes to Measuring mode.

3.5 Data Logging

Connecting device to PC

1. Switch ON the device and align the Datalink Communication port on the device to the IR interface of the PC.
2. Use the MSA Link software to communicate with the device.

See MSA Link documentation for detailed instructions.

3.6 Function Tests on the Device

Alarm Test

1. Turn ON the device. Verify that:

- all LCD segments are activated momentarily
- alarm LEDs flash
- horn sounds briefly

- vibrating alarm triggers briefly.

3.7 Safe LED

The device is equipped with a green SAFE LED. This green SAFE LED flashes every 15 seconds under the following conditions:

- the SAFE LED feature is enabled
- device is in Measurement Mode (Normal Operation)
- combustible reading is 0% LEL or 0.00% CH_4
- Oxygen (O_2) reading is 20.8%
- Carbon Monoxide (CO) reading is 0 ppm or 0 mg/m^3
- Hydrogen Sulfide (H_2S) reading is 0 ppm or 0 mg/m^3
- no gas alarms are present (low or high)
- device is not in Low Battery warning or alarm
- CO, H_2S, STEL and TWA readings are 0 ppm or 0 mg/m^3.

3.8 Bump Test

WARNING!

Perform a Bump Test before each day's use to verify proper device operation.

Failure to perform this test can result in serious personal injury or death.

This test quickly confirms that the gas sensors are functioning. Perform a full calibration periodically to ensure accuracy and immediately if the device fails the Bump Test. The Bump Test can be performed using the procedure below or automatically using the GALAXY Test Stand.

Equipment

See accessory section for ordering information for these components.

- Calibration Check Gas Cylinder
- 0.25 liters/min. Flow Regulator
- 1/8" ID Superthane Ester Tubing
- ALTAIR 4X Calibration Cap

Performing a Bump Test

1. From the normal measure screen press the ▼↖↖ button to display "`BUMP TEST?`".
2. Verify the gas concentrations displayed match the Calibration Check Gas Cylinder. If they do not, adjust the values through the Calibration Setup menu as described in 3.4 Device Setup.

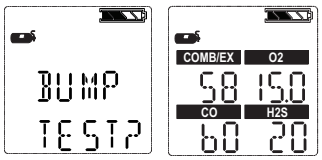

3. Attach the calibration cap to the device.
   a. Insert tab on calibration cap into slot on device.
   b. Press calibration cap as shown until it seats onto device.
   c. Press both side tabs down onto device until they snap in.
   d. Ensure that the calibration cap is properly seated.
   e. Connect one end of the tubing to the calibration cap.
   f. Connect other end of tubing to the cylinder regulator (supplied in the calibration kit).

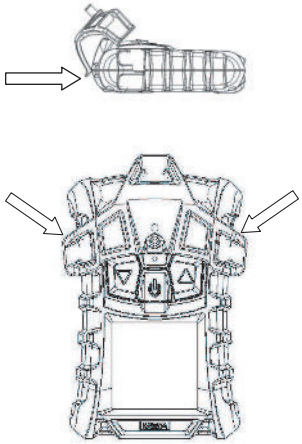

4. Press the ⏻ button to start the bump test then open the valve on the regulator. The hourglass will flash and the sensors will respond to the gas.
5. Close the valve after bump testing.

After the Bump Test completes, the device momentarily displays "BUMP PASS" or "BUMP ERROR" along with the label of any sensor that failed before returning to Measure mode. If the device fails the Bump Test, perform a calibration as described in 3.9 Calibration .

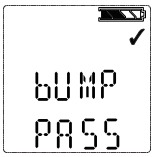

The √ symbol will be displayed in the Measure mode for 24 hours after a successful Bump Test.

3.9 Calibration

The device can be calibrated either manually using this procedure or automatically using the GALAXY Test Stand (8.5 Calibrations).

Calibration must be performed using a flow regulator with a flow rate set to 0.25 liters per minute.

If a battery charging cycle is interrupted before it is completed (4 hours for a fully discharged battery), allow the device's internal temperature to stabilize for 30 minutes before performing a Calibration.

3.9.1 Fresh Air Setup and Zero Calibration

To skip the ZERO procedure and move directly to the calibration span procedure, push the ▲ button. If no button is pushed for 30 seconds, the device prompts user to perform a Span calibration before returning to the Normal Operation mode.

1. Press and hold the ▲ button in Normal Operation mode for three seconds.
2. If calibration lockout option is selected, enter password.

   ZERO screen displays.

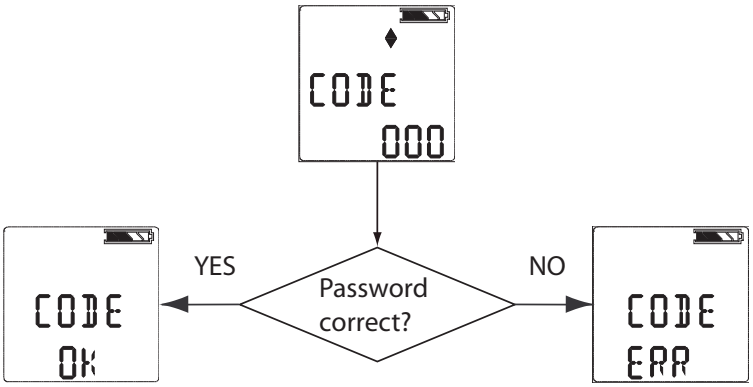

- If calibration lockout option is NOT selected:

ZERO screen displays.

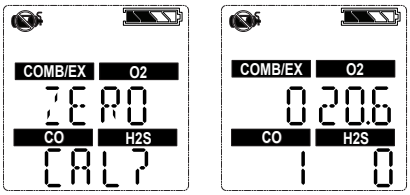

3. With the device exposed to fresh air, press the q button to confirm the ZERO screen. A sensor refresh and Zero Calibration now occur.

   NOTE: Alternatively press the ▲ button to execute a Fresh Air setup (FAS). See 3.2.1 Fresh Air Setup (FAS) for more details.

NOTE: After ZERO calibration completes, the device momentarily displays "ZERO PASS" or "ZERO ERR" along with the flag of any sensor that failed.

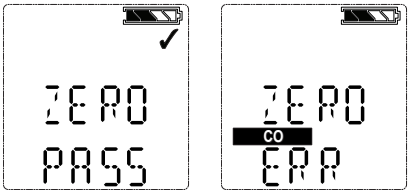

NOTE: During instrument zero calibration, the oxygen sensor is also span calibrated to 20.8% oxygen fresh air, adjusting the calibration curve as needed. During instrument span calibration, the O_2 sensor's accuracy is checked against a known oxygen gas concentration without adjusting the calibration curve.

3.9.2 Span Calibration

To skip the Span procedure, push the ▲ button.

If no button is pushed for 30 seconds, the device returns to the Measuring mode.

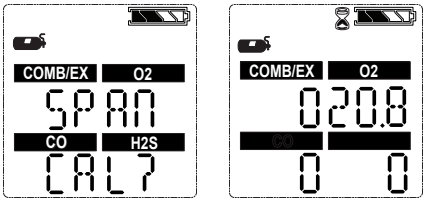

1. Once the Zero is set, the SPAN screen displays.
2. Connect the appropriate calibration gas to the device.

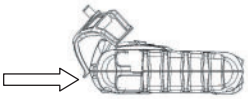

3. Attach the calibration cap to the device.
   a. Insert tab on calibration cap into slot on device.
   b. Press calibration cap as shown until it seats onto device.
   c. Press both side tabs down onto device until they snap in.
   d. Ensure that the calibration cap is properly seated.
   e. Connect one end of the tubing to the calibration cap.
   f. Connect other end of tubing to the cylinder regulator (supplied in the calibration kit).

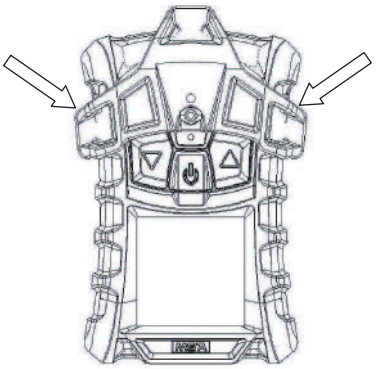

4. Open the valve on the regulator.

5. Press the ⏻ button to calibrate [span] the device.

   LEDs flash

   `SPAN` *calibration starts.*

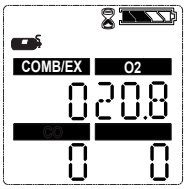

- After the `SPAN` calibration completes, the device momentarily displays "`SPAN PASS`" or "`SPAN ERR`" along with the label of any sensor that failed then returns to the Measuring mode.

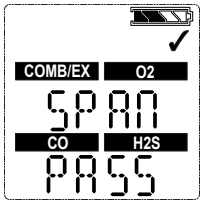

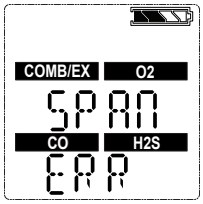

If a sensor is nearing its end of life, this "`SPAN PASS`" indication will be followed by the end of sensor life warning (♥ symbol). The ♥ symbol, and the gas type of the sensor nearing its end of life, will blink for 15 seconds when the device returns to measure mode. When in measure mode, the ♥ symbol is continuously displayed.

If the span calibration is unsuccessful:

- A sensor life indicator displays (⚠ symbol and ♥ symbol) to show the sensor has reached its end of life and should be replaced.
- The device will remain in alarm state until the ▲ button is pressed.
- The ⚠ symbol and ♥ symbol will remain on the display until a successful calibration or sensor in question is replaced.

A span calibration can fail for many reasons besides sensor at the end of his life. If a span calibration failure occurs, items such as remaining gas in the calibration cylinder, gas expiration date, security of the calibration cap, etc. should be verified and calibration should be repeated prior to replacing the sensor.

Finishing Calibration

1. Close the valve on the regulator.
2. Remove the calibration cap.

The calibration procedure adjusts the span value for any sensor that passes the ca-libration test; sensors that fail calibration are left unchanged. Since residual gas may be present, the device may briefly go into an exposure alarm after the ca-libration sequence is completed.

4 Maintenance

If an error occurs during operation, use the displayed error codes to determine appropriate next steps.

⚠ WARNING!

Repair or alteration of the ALTAIR 4X Multigas Detector, beyond the procedures described in this manual or by anyone other than a person authorized by MSA, could cause the instrument to fail to perform properly. Use only genuine MSA replacement parts when performing any maintenance procedures described in this manual. Substitution of components can seriously impair instrument performance, alter intrinsic safety characteristics or void agency approvals.

Failure to follow this warning can result in serious personal injury or death.

4.1 Troubleshooting

Problem		Description	Reaction
ERROR TEMP		Temperature is below -40°C (-40°F) or above 75°C (167°F).	Return device to normal temperature range and recalibrate. Contact MSA
ERROR EE		EEPROM Memory error	Contact MSA
ERROR PRG		Flash Memory error	Contact MSA
ERROR RAM		RAM Memory error	Contact MSA
ERROR UNK		Unknown error	Contact MSA
	LOW BATT	Battery warning repeats every 60 seconds.	Remove from service as soon as possible and recharge battery
	BATT ALARM	Battery is completely discharged.	Device is no longer sensing gas. Remove from service and recharge battery.
ERROR CHARGE		Charge error	Device must be between 10°C (50°F) and 36°C (97°F) to charge. Contact MSA if problem persists
SENSOR ERROR		Missing Sensor	Verify if sensor is properly installed
Device does not turn on		Low battery	Charge device
♥		Sensor warning	Sensor is near the end of its life
⚠ & ♥		Sensor alarm	Sensor has reached the end of its life and cannot be calibrated. Replace sensor and recalibrate.

4.2 Live Maintenance Procedure - Replacing and Adding a Sensor

NOTE: Leave the hazardous area prior to any maintenance or troubleshooting of the device.

NOTICE

- Before handling the PC board, ensure you are properly grounded; otherwise, static charges from your body could damage the electronics. Such damage is not covered by the warranty. Grounding straps and kits are available from electronics suppliers.
- While device case is open, do not touch any internal components with metallic/conductive objects or tools. Damage to the device can occur.

WARNING!

- Remove and reinstall sensors carefully, ensuring that the components are not damaged; otherwise device intrinsic safety may be adversely affected, wrong readings could occur, and persons relying on this product for their safety could sustain serious personal injury or death.
- To add a sensor to an device that is not already equipped with a full array of sensors, remove the sensor plug from in front of the formerly unused sensor housing.

Failure to follow this warning can result in serious personal injury or death.

1. Verify that the device is turned OFF.
2. Remove the four case screws, and remove the case front while carefully noting the orientation of the sensor gasket.
3. Gently lift out and properly discard the sensor to be replaced.
   a. Using fingers only, gently remove the toxic, combustible, or oxygen sensor by gently rocking it while pulling it straight from its socket.
4. Carefully align the new sensor contact pins with the sockets on the printed circuit board and pressing it firmly in place.
   a. Ensure tab on sensor aligns with groove at top of holder.
   b. Insert the toxic sensor by placing it in the left-hand position of the sensor holder.
   c. Insert the O_2 sensor by placing it in the right-hand position of the sensor holder.
   d. Insert the combustible sensor by placing it in the middle position of the sensor holder.
   e. If any sensor is not to be installed, ensure that a sensor plug is installed properly in its place.
5. Reinstall the case front.
6. Re-install the screws.
7. Power ON the device. The device automatically senses that a new sensor is installed and displays the `SENSOR DSCVRY` screen. If the sensor replaced is the same as the previous sensor, the device starts up normally. Proceed to step 10 and calibrate the device.
8. If the sensor replaced is not the same as the previous sensor or this sensor channel was deactivated, the device automatically senses the difference when it is turned ON via `SENSOR CHANGE` on the display and prompts the user to accept or reject the change. "`ACCEPT`?" appears on the display.
   a. Accept the change with ▼ button or reject with ▲ button.
   b. Go into the sensor setup and turn on the appropriate sensor (3.4 Device Setup) after being prompted for a password.
9. Calibrate the device after the sensors have stabilized.

Allow sensors to stabilize at room temperature for at least 30 minutes before calibration (3.9 Calibration).

WARNING!

Calibration is required after a sensor is installed; otherwise, the device will not perform as expected and persons relying on this product for their safety could sustain serious personal injury or death.

4.3 Cleaning

Routine Cleaning: Clean the exterior of the device regularly using only a damp cloth. Do not use cleaning agents, as many contain silicone, which will damage the combustible sensor.

Dust and Dirt Exposure: Use a dry, soft bristled brush to remove any dust or dirt that has accumulated on the apparatus, especially at the sensor openings. If there is a buildup of dust or dirt particles remaining in the sensor area after brushing, use a vacuum to remove remaining particles, but maintain at least 1/2" (1.3 cm) distance from the gas detector.

Water Exposure: If the apparatus is exposed to water, turn the device sensor side down and gently shake water off the sensor area. Any remaining water can be removed with a clean, dry cloth. If the apparatus is submerged in water, perform a calibration before use.

4.4 Storage

When not in use, store the device in a safe, dry place between 18°C and 30°C (between 65°F and 86°F). After storage, always recheck device calibration before use.

4.5 Shipment

Pack the device in its original shipping container with suitable padding. If the original container is unavailable, an equivalent container may be substituted.

5 Technical Specifications/Certifications

5.1 Technical Specifications

Weight	7.9 oz. (instrument with battery and clip)							
Dimensions (L x W x H)	4.4 x 3.00 x 1.37 inches – without fastening clip							
Alarms	Four gas alarm LEDs, a charge status LED, an audible alarm and a vibrating alarm							
Volume of audible alarm	95 dBA typical							
Display	LCD display							
Battery type	Rechargeable Li polymer battery. Li polymer battery must not be charged in Ex area.							
Device run time	22 hours at 77 °F (25 °C)							
Charging time	≤ 4 hours The maximum safe area charging voltage U_m = 6.7 VDC							
Warm up time	2 min							
Temperature range	14 to 104°F (-10 to 40°C)		Normal operating range					
	-4 to 122°F (-20 to 50°C)		Extended operating range					
	50 to 95°F (10 to 35°C)		While charging battery					
	-40 to +140°F (-40 to 60°C)		Intrinsic safety ambient temperature range (, IEC)					
Humidity range	15% - 90%		relative humidity, non-condensing,					
	5% - 95%		RH intermittent					
Atmospheric pressure range	800 to 1200 mbar							
Ingress protection	IP 67							
Measuring methods	Combustible gases: Catalytic sensor Oxygen: Electrochemical sensor Toxic gases: Electrochemical sensor							
Measuring range	Combustible	O_2*	CO	H_2S	H_2S-LC	NO_2	SO_2	CO-H_2

	0-100% LEL 0-5.00% Vol. CH_4	0-30% Vol.	0-1999 ppm	0-200 ppm	0-100 ppm	0-50 ppm	0-20 ppm	0-2000 ppm

*This device is not approved for use in atmospheres containing >21% oxygen.

5.2 Factory-set Alarm Thresholds and Setpoints

Sensor	LOW alarm	HIGH alarm	STEL	TWA
LEL	10 % LEL	20 % LEL	--	--
O_2 (%)	19.5	23.0	--	--
CO (ppm)	25	100	100	25
H_2S (ppm)	10	15	15	10

Sensor	Min. alarm set point	Max. alarm set po	Auto-cal values
LEL	5 %	60 %	58 %
O_2 (%)	5	24	15.0
CO (ppm)	10	1700	60
H_2S (ppm)	5	175	20

Sensor	LOW Alarm	HIGH Alarm	STEL	TWA	Min Alarm Setpoint	Max Alarm Setpoint	Auto-Cal Values
Ex	10% LEL	20% LEL	--	--	5	60	58%
EX-H	10% LEL	20% LEL	--	--	5	60	58%
EX-M	0.5 %vol	1.0 %vol	--	--	0.1%vol	3.0 %vol	2.5 %vol
H2S-LC	5 ppm	10 ppm	10 ppm	1 ppm	1 ppm	70 ppm	20 ppm
NO2	2 ppm	5 ppm	5 ppm	2 ppm	1 ppm	47.5 ppm	10 ppm
SO2	2 ppm	5 ppm	5 ppm	2 ppm	1 ppm	17.5ppm	10 ppm
O2	19.5%	23 %	--	--	5	24	15.0%
CO	25 ppm	100 ppm	100	25	10	1700	60 ppm
CO-H2	25 ppm	100 ppm	100	25	10	1700	60 ppm
H2S	10 ppm	15 ppm	15	10	5	175	20 ppm

NOTE: This device is not approved for use in atmospheres containing >21% oxygen.

5.3 Certification

See device label for the certification that applies to the specific device.

IECEx TestSafe Australia	Ex ia I Ma Ex da ia IIC T3 Ga - When Combustible XCell Sensor is installed Ex ia IIC T3 Ga - When Combustible XCell Sensor is not installed Ta=-40°C to +60°C

5.4 Performance Specification

Combustible Gas

Range	0 to 100 % LEL or 0 to 5 % CH_4

Resolution	1 % LEL or 0.05 % vol CH_4
Reproducibility	3 % LEL, 0 % to 50 % LEL reading or 0.15 % CH_4, 0.00 % to 2.50 % CH_4 (normal temperature range)
	5 % LEL, 50 % to 100 % LEL reading or 0.25 % CH_4, 2.50 % to 5.00 % CH_4(normal temperature range)
	5 % LEL, 0 % to 50 % LEL reading or 0.25 % CH_4, 0.00 % to 2.50 % CH_4(extended temperature range)
	8 % LEL, 50 % to 100 % LEL reading or 0.4 % CH_4, 2.50 % to 5.00 % CH_4(extended temperature range)
Response time	90% of final reading (Typical) <15 seconds(pentane) <10 seconds (methane) (normal temperature range)

Oxygen

The oxygen sensor has built-in temperature compensation. However, if temperature shifts dramatically, the oxygen sensor reading may shift. Zero the device at the work place temperature for the least effect.

Range	0 to 30 vol.% O_2*
Resolution	0.1 vol.% O_2
Reproducibility	0.7 vol.% O_2 for 0 to 30 vol.% O_2
Response time (Typical)	(90% of final reading) <10 second (normal temperature range)
Sensor Cross-Sensitivity	The oxygen sensor has no common cross-sensitivities.

Carbon Monoxide

Range	0 - 1999 ppm (0 - 1999 mg/m^3) CO
Resolution	1 ppm CO for 6 to 1999 ppm
Reproducibility	±5 ppm O or 10 % of reading, whichever is greater (normal temperature range)
	±10 ppm CO or 20 % of reading, whichever is greater
Response time (Typical)	90% of final reading <15 seconds (normal temperature range)

Test Gas Applied	Concentration (PPM) Applied	CO Channel % Cross-sensitivity
Hydrogen Sulfide (H_2S)	40	0
Carbon Monoxide (CO)	100	100
Nitric Oxide (NO)	50	84
Nitrogen Dioxide (NO_2)	11	0
Sulfur Dioxide (SO_2)	9	-4
Chlorine (Cl_2)	10	0
Hydrogen Cyanide (HCN)	30	-5
Ammonia (NH_3)	25	0

Test Gas Applied	Concentration (PPM) Applied	CO Channel % Cross-sensitivity
Toluene	53	0
Isopropanol	100	-8
Hydrogen (H_2)	100	48

Hydrogen Sulphide

Range	0 - 200 ppm H_2S
Resolution	1 ppm H_2S, for 3 to 200 ppm H_2S
Reproducibility	±2 ppm H_2S or 10 % of reading, whichever is greater (normal temperature range)
	±5 ppm H_2S or 10 % of reading, whichever is greater
Response time	90 % of final reading < 15 seconds (normal temperature range)

Test Gas Applied	Concentration (PPM) Applied	H_2S Channel % Cross-sensitivity
Hydrogen Sulfide (H_2S)	40	100
Carbon Monoxide (CO)	100	1
Nitric Oxide (NO)	50	25
Nitrogen Dioxide (NO_2)	11	-1
Sulfur Dioxide (SO_2)	9	14
Chlorine (Cl_2)	10	-14
Hydrogen Cyanide (HCN)	30	-3
Ammonia (NH_3)	25	-1
Toluene	53	0
Isopropanol	100	-3
Hydrogen (H_2)	100	0

Hydrogen Sulphide Low Concentration (H_2S-LC)

Range	0 - 100 ppm H_2S
Resolution	0.1 ppm H_2S
Reproducibility	±0.2 ppm H_2S or 10 % of reading, whichever is greater (normal temperature range)
	±0.5 ppm H_2S or 20 % of reading, whichever is greater (extended temperature range)
Response time	90 % of final reading < 15 seconds (normal temperature range)

Nitrogen Dioxide

Range	0 - 50 ppm NO_2
Resolution	0.1 ppm NO_2
Reproducibility	±1 ppm NO_2 or 10% of reading, whichever is greater (normal temperature range)
	±2 ppm NO_2 or 20% of reading, whichever is greater (extended temperature range)

Response time (Typical)	90% of final reading <15 seconds (normal temperature range)

Sulfur Dioxide

Range	0 - 20 ppm SO_2
Resolution	0.1 ppm SO_2
Reproducibility	±1 ppm SO_2 or 10% of reading, whichever is greater (normal temperature range)
	±2 ppm SO_2 or 20% of reading, whichever is greater (extended temperature range)
Response time (Typical)	90% of final reading <15 seconds (normal temperature range)

Hydrogen Resistant CO (CO H2-RES)

Range	0 - 2000 ppm CO
Resolution	1 ppm CO
Reproducibility	±5 ppm CO or 10% of reading, whichever is greater (normal temperature range)
	±10 ppm CO or 20% of reading, whichever is greater (extended temperature range)
Response time (Typical)	90% of final reading <15 seconds (normal temperature range)
Hydrogen resistance	<5%

5.5 XCell Sensor Patents

Combustible sensor	P/N 10106722	Patent Pending
O_2 sensor	P/N 10106729	Patent Pending
CO/H_2S sensor	P/N 10106725	Patent Pending

6 Ordering Information

Description	Part Number
Stainless steel suspender clip	10069894
34L Quad Gas Mix (1.45% CH_4, 15% O_2, 60 ppm CO, 20 ppm H_2S)	10048280
58L Quad Gas Mix (1.45% CH_4, 15% O_2, 60 ppm CO, 20 ppm H_2S)	10045035
Calibration assembly (cap, tube, connector)	10089321
Global Power Supply with Charge Connector	10092936
Vehicle Charging cradle assembly	10095774
MSA Link Software CD-ROM	10088099
JetEye IR adapter with USB connector	10082834
Combustible sensor replacement kit	10106722
O_2 sensor replacement kit	10106729
CO/H_2S Two Toxic sensor replacement kit	10106725
Combustible EX-M Sensor replacement kit	10121212
Combustible EX-H Sensor replacement kit	10121211
H_2S-LC/CO Sensor replacement kit	10121213
CO/NO_2 Sensor replacement kit	10121217
H_2S-LC/SO_2 Sensor replacement kit	10121215
CO H_2-RES/H_2S Sensor replacement kit	10121214
Front Housing with integrated dust filters (charcoal)	10110030
Front Housing with integrated dust filters (fluorescent)	10110029
LCD Frame assembly (frame LCD, zebra strips, screws)	10110061
Sensors gasket, socket head cap screws (4x), self tapping (2x)	10110062

7 Cross Reference Factors

Combustible Gas - Cross Reference Factors for Altair 4X General Purpose Calibration Using the Standard Combustible Sensor and Calibration Cylinder (PN 10045035) Set to 58% LEL

Combustible Gas	Multiply Reading By
Acetylene	0.6
Butane	0.7
Cyclohexane	0.9
Diethylether	0.7
Ethane	0.6
Ethanol	0.6
Ethylene	0.5
Gasoline	0.9
n-Hexane	0.9
Hydrogen	0.6
Isopropyl Alcohol	0.9
Methane (5.0 Vol%)	0.5
Methanol	0.5
Pentane Simulant	1.0
Pentane	0.7
Propane (2.1 Vol%)	0.6
Toluene	1.0
Xylene	2.5

Response Notes

1. For an instrument calibrated on Pentane Simulant, multiply the displayed %LEL value by the conversion factor above to get the true %LEL.
2. These conversion factors should be used only if the combustible gas is known.
3. These conversion factors are typical. Individual units may vary by +25% from these values.
4. The results are intended for guidance only. For the most accurate measurements, an instrument should be calibrated using the gas under investigation.

Combustible Gas (with Optional EX-H Sensor) - Cross Reference Factors for Altair 4X General Purpose Calibration Using the Optional Heavy Hydrocarbon Sensor and Calibration Cylinder (PN 10045035) Set to 58% LEL

Combustible Gas	Multiply Reading By
Acetone	0.6
Methyl Ethyl Ketone (MEK)	1.0
Nonane	1.5
Xylene	1.6

8 Appendix

8.1 Start Up Sequence (Power on)

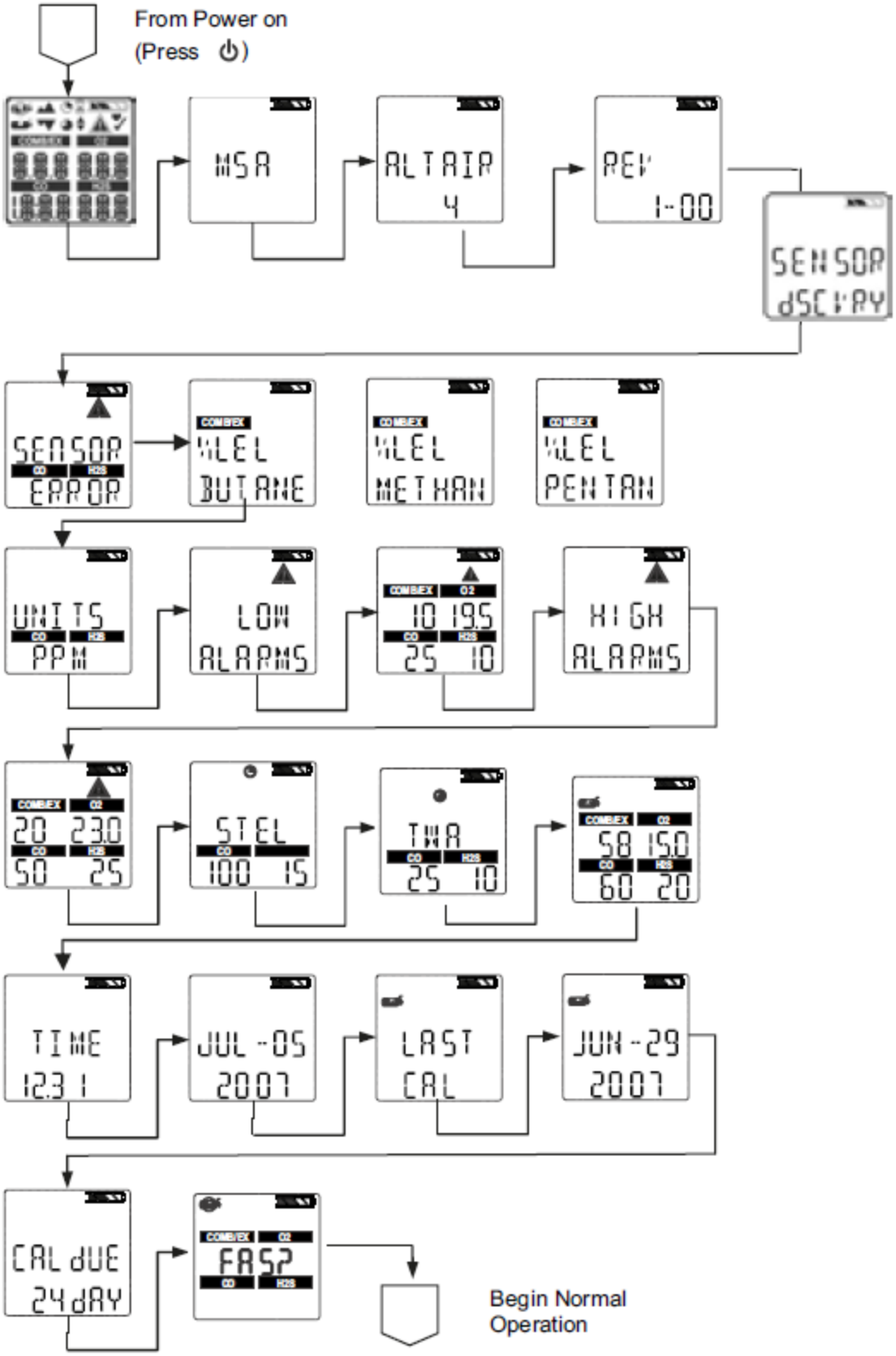

8.2 Fresh Air Setup (FAS)

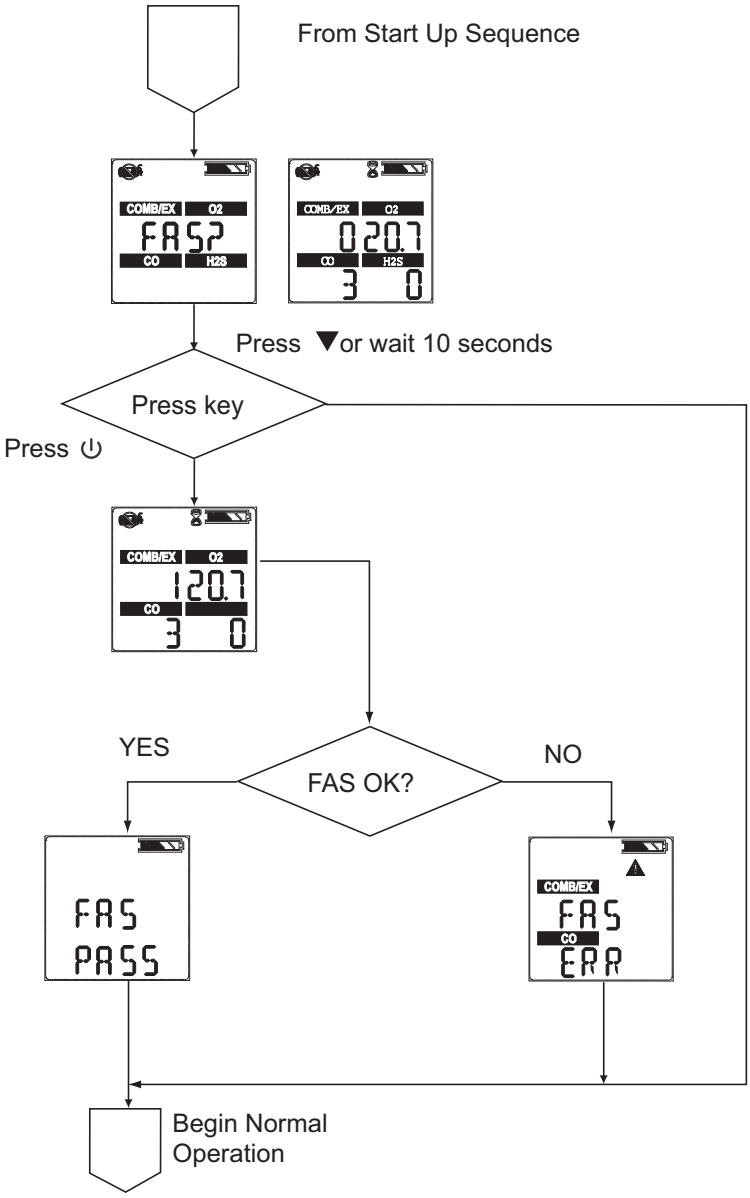

8.3 Reset Screen Controls

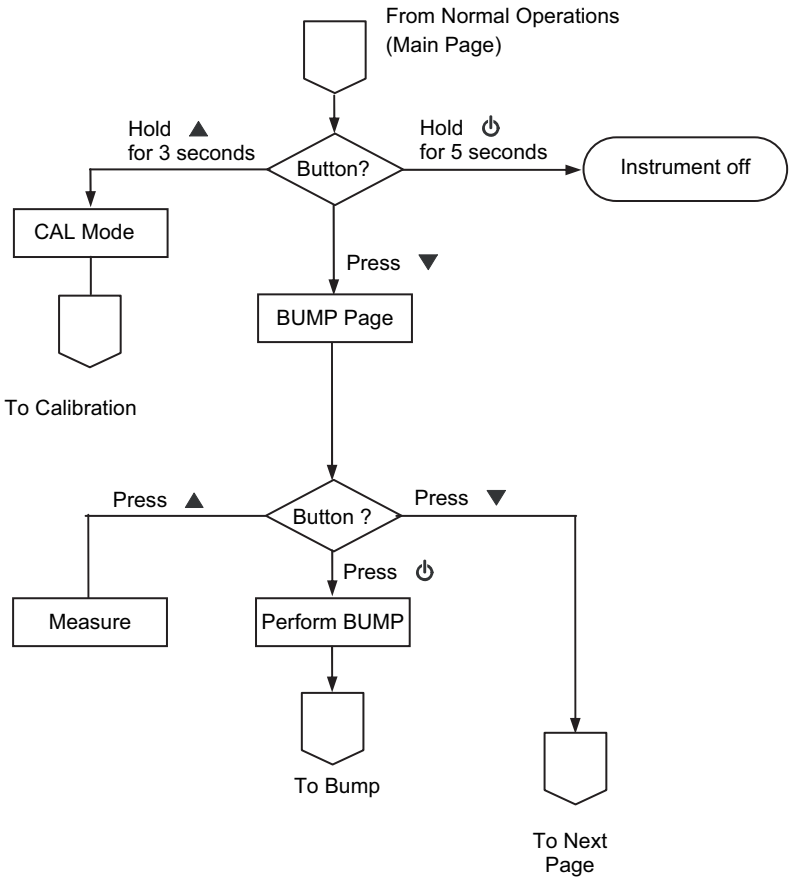

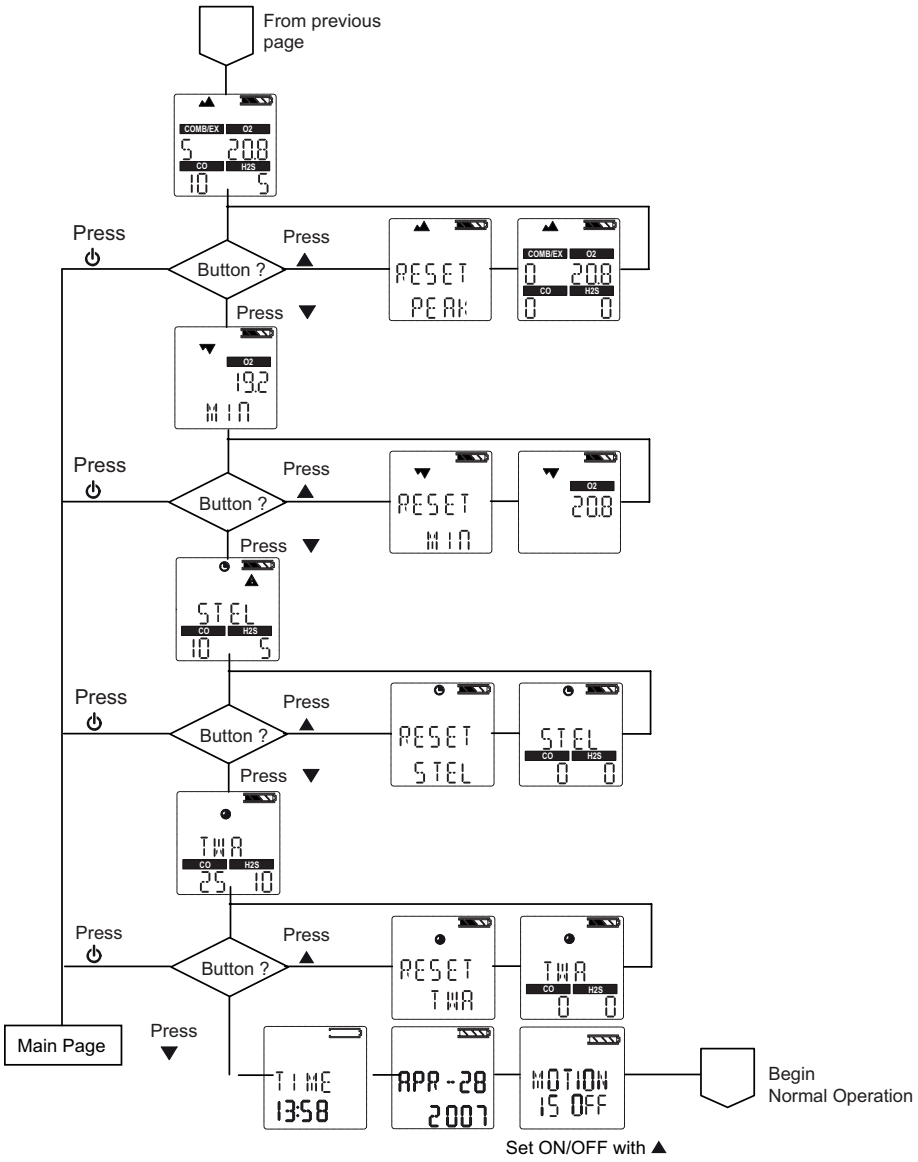
From previous page
COMB/EX
O2
CO
H2S
Press
Button ?
RESET PEAK
19.2
MIN
RESET MIN
STEL
RESET STEL
TWA
RESET TWA
Main Page
TIME
13:58
APR-28
2007
MOTION IS OFF
Begin Normal Operation
Set ON/OFF with ▲

8.4 Bump Test

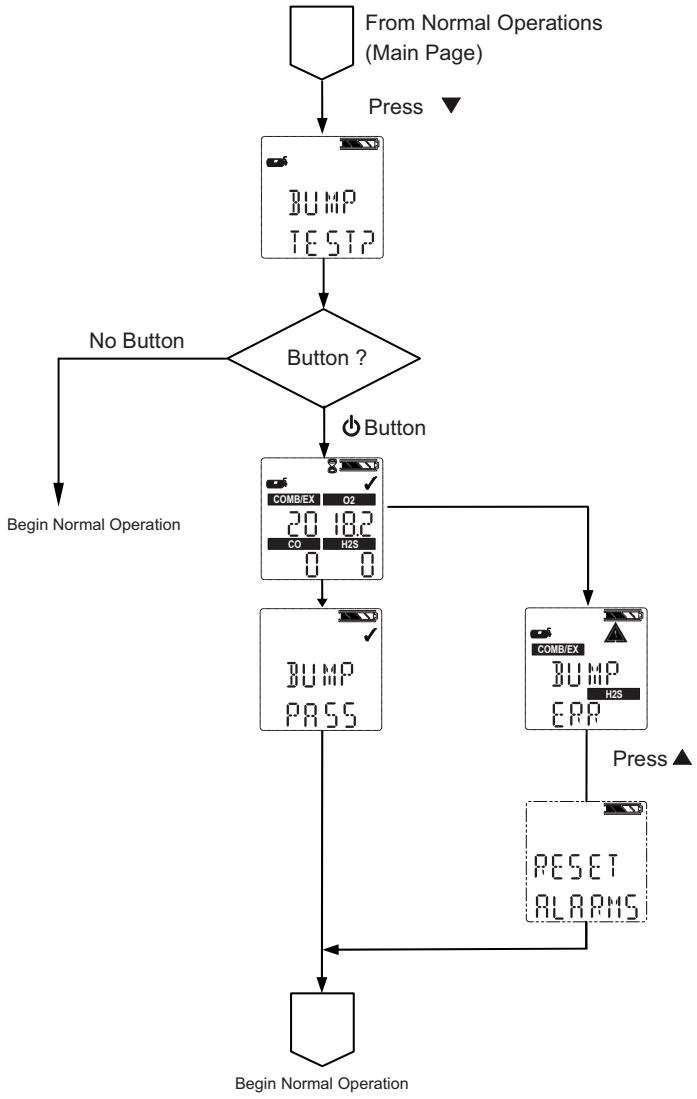
From Normal Operations
(Main Page)
Press ▼
BUMP
TEST?
No Button
Button ?
Button
Begin Normal Operation
COMB/EX
O2
20
18.2
CO
H2S
0
0
BUMP
PASS
COMB/EX
BUMP
H2S
ERR
Press ▲
RESET
ALARMS
Begin Normal Operation

8.5 Calibrations

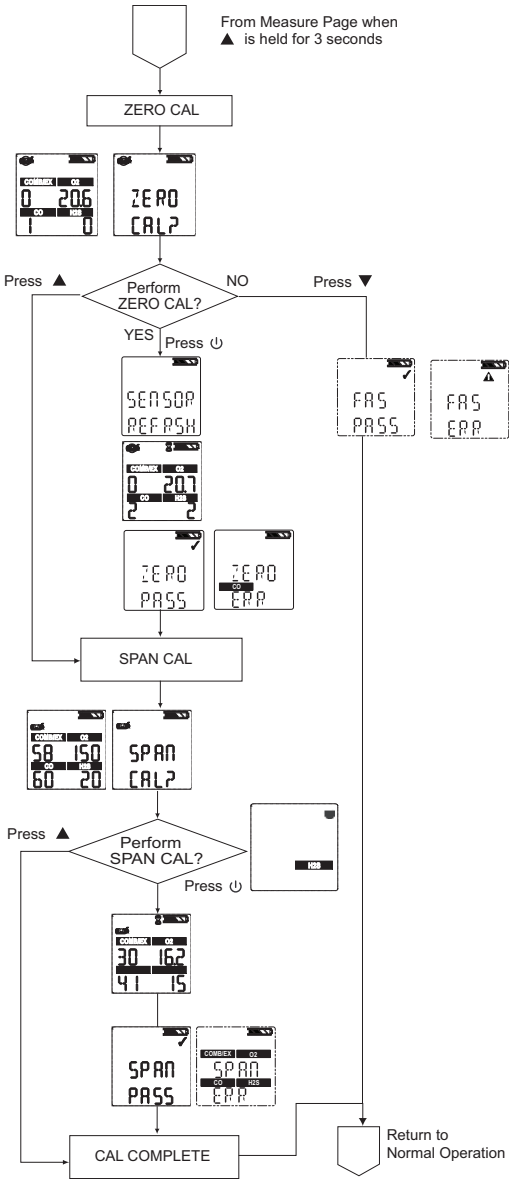

8.6 Options Setup

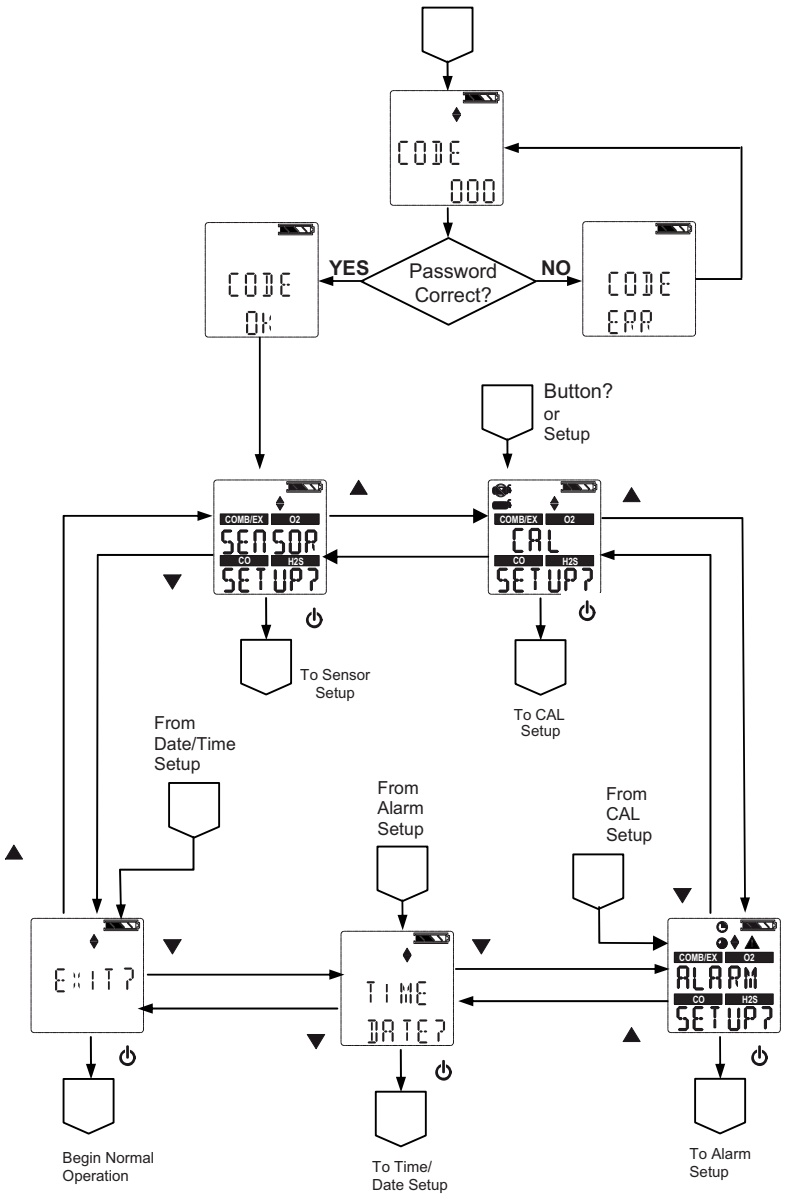

8.7 Sensor Setup

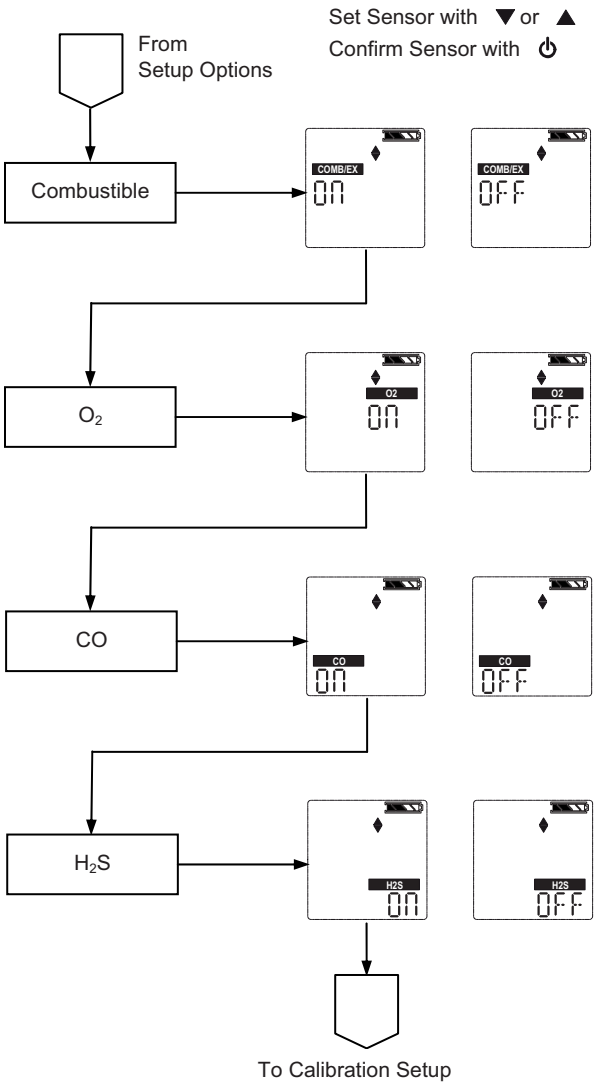

8.8 Calibration Setup

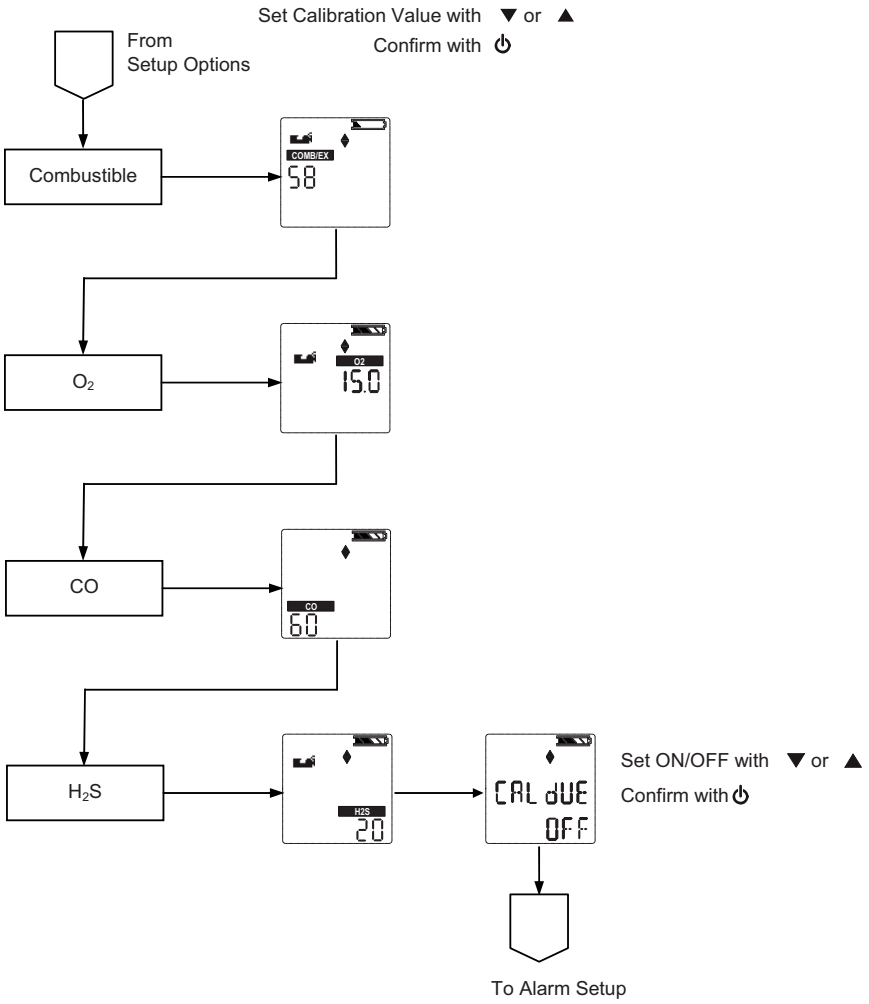

8.9 Alarm Setup

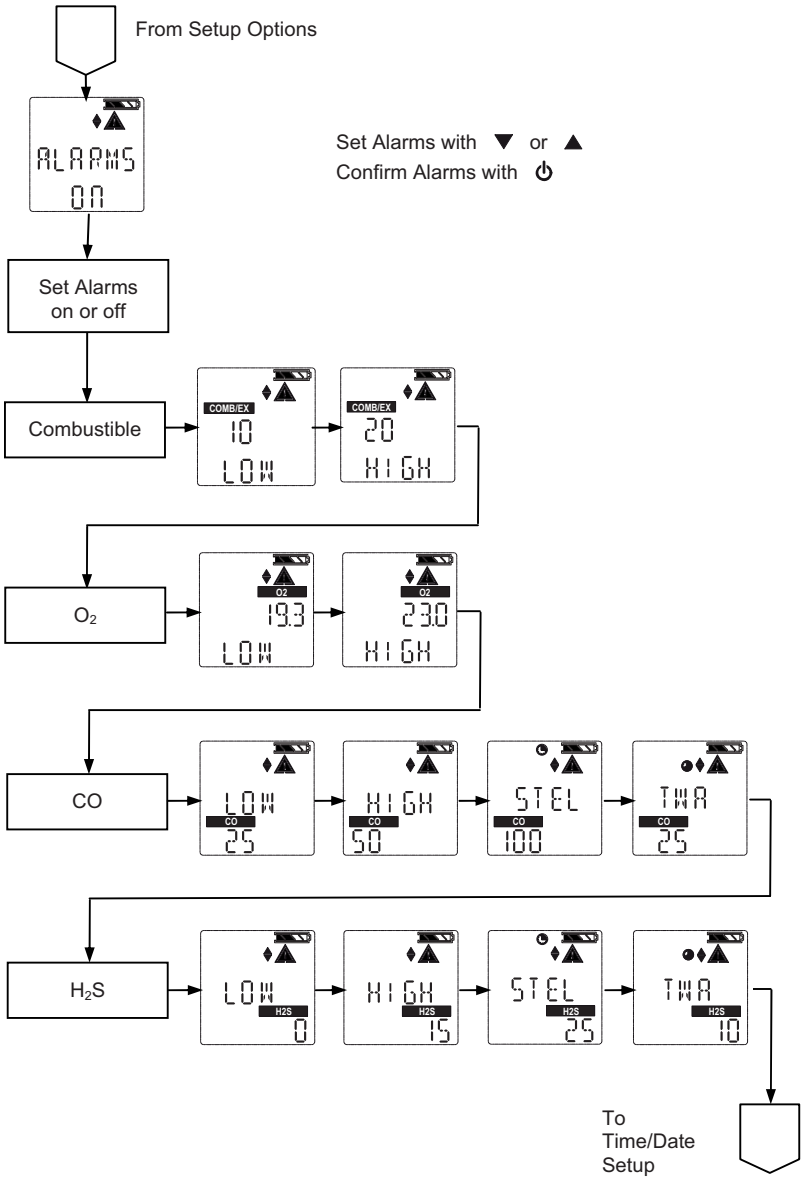
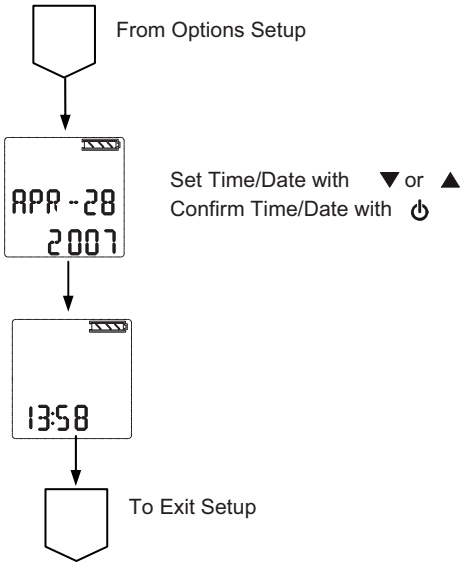
8.10 Time and Date Setup